# Tampere 40 L

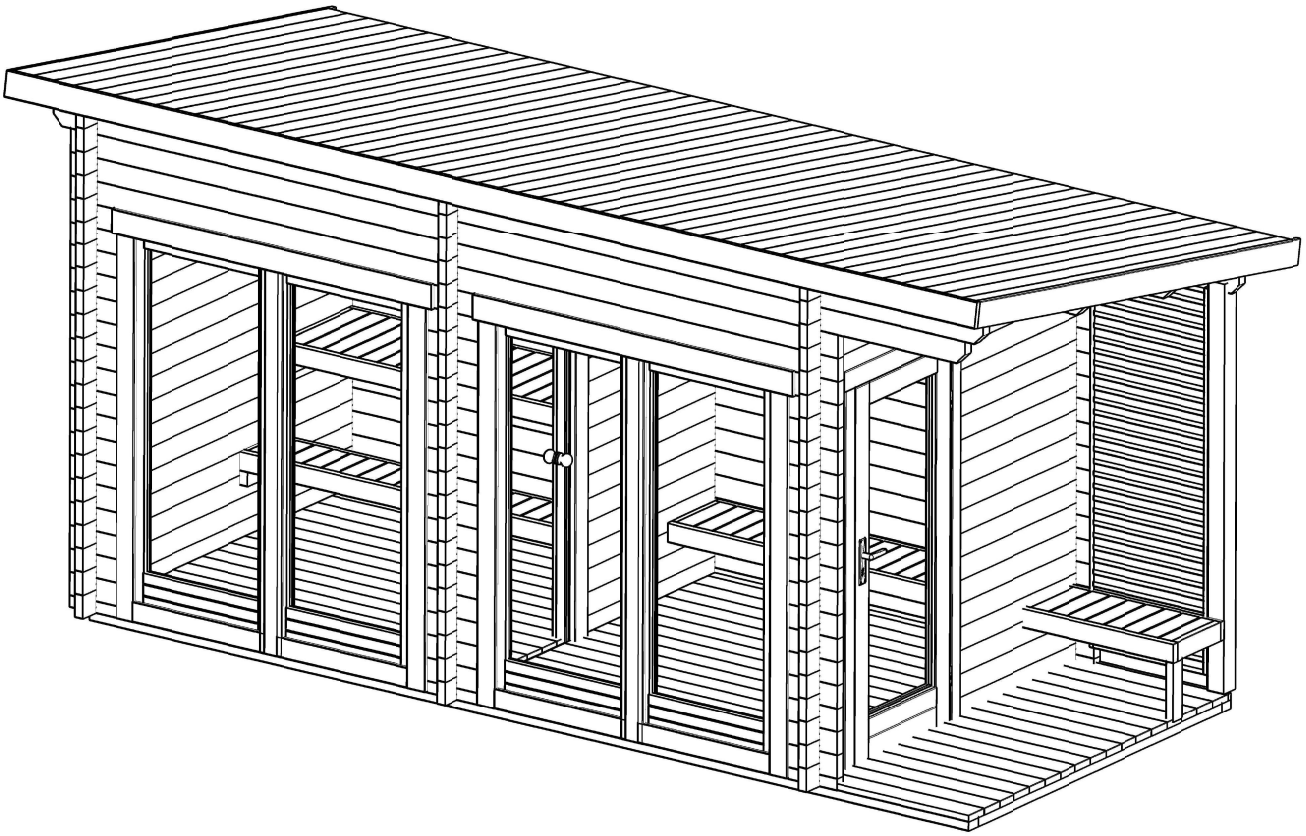

| Pos | Specification-Spezifikation-Specificatie-Nomenclature-Elementi-Especification<br>Tampere 40 L | Qty | Profile (mm) | Lenght (mm) |
|---|---|---|---|---|
| 001 | 100 2000 2000 100 | 2 | 40x57 | 4320 |
| 002 | 189 100 | 32 | 40x114 | 329 |
| 003 | 189 189 | 16 | 40x114 | 418 |
| 004 | 100 2000 2000 100 | 1 | 40x114 | 4320 |
| 005 | 100 2000 2000 100 | 19 | 40x114 | 4320 |
| 006 | 100 2000 2000 818 | 1 | 40x114 | 5038 |
| 007 | 200 2000 2000 918 | 2 | 40x114 | 5238 |
| 008 | 300 2000 2000 1018 | 1 | 40x114 | 5438 |
| 009 | 300 2000 2000 1018 | 1 | 40x114 | 5438 |
| 010 | 100 2000 100 | 23 | 40x114 | 2280 |
| 015 | 100 190 | 34 | 40x114 | 330 |
| 016 | 1108 100 | 17 | 40x114 | 1248 |
| 017 | 998 100 | 17 | 40x114 | 1138 |
| WA-1 | 416 014 013 012 011 10° 2280 | 1 | | |
| WB-1 | 416 014 013 012 011 10° 2280 | 1 | | |
| WC-1 | 416 014 013 012 011 10° 2280 | 1 | | |
| F2 | FOUNDATION-FUNDAMENT-FONDATION-FONDAZIONE-VIGAS DE CIMENTACIÓN | 2 | 44x90 | 4960 |
| F1 | FOUNDATION-FUNDAMENT-FONDATION-FONDAZIONE-VIGAS DE CIMENTACIÓN | 14 | 44x90 | 1984 |
| UBS2 | UPPER BENCH SUPPORT-TRAGELEISTE-STEUNEN BAR-SUPPORT-SUPPORTO-SOPORTE | 2 | 44x70 | 593 |
| UBS1 | UPPER BENCH SUPPORT-TRAGELEISTE-STEUNEN BAR-SUPPORT-SUPPORTO-SOPORTE | 2 | 44x70 | 295 |

| Model | Tampere 40 L | Material | Page 1/3 |
|---|---|---|---|

| Pos | Specification-Spezifikation-Specificatie-Nomenclature-Elementi-Especification<br>Tampere 40 L | Qty | Profile (mm) | Lenght (mm) |
|---|---|---|---|---|
| CIS1 | CEILING INSULATION SUPPORT-TRAGELEISTE-STEUNEN BAR-SUPPORT-SUPPORTO-SOPORTE | 2 | 44x70 | 2000 |
| CIS2 | CEILING INSULATION SUPPORT-TRAGELEISTE-STEUNEN BAR-SUPPORT-SUPPORTO-SOPORTE | 2 | 44x70 | 1912 |
| PL1 | PURLIN-DAKBALK-DACHPFETTE-PANNE-ARCARECCIO-CORREA<br>300 2000 2000 1018 | 2 | 44x144 | 5438 |
| F-1 | Floor board-Fussbodenbrett-Vloerplank-Lame de plancher-Tavola pavimento-Tabla de suelo | 36 | 114x28 | 1992 |
| R-1 | Roof board-Dachbrett-Dakplank-Volige-Tavola tetto-Tabla de tejado | 48+2 | 114x28 | 2544 |
| T-1 | Terrace board-Terrassendiele-Vlonderplank-Lame de terrasse-Tavola terrazzo-Tabla de terraza | 18+1 | 114x28 | 841 |
| | -POST 8.5x8.5 | 1 | 85x85 | 1995 |
| FLB-1 | Floor beading 3000-Fussbodenleiste-Plinten-Moulure de finition-Listello pavimento-Liston de suelo | 5 | 18x40 | 15 rmt |
| TSB1 | Threaded steel bar kit-Gewindestange satz-Draadstang set-Kit de tiges filetées-Kit barra filettata-Kit barra roscada | 3 | ¨14 | 2620 |
| TSB2 | Threaded steel bar kit-Gewindestange satz-Draadstang set-Kit de tiges filetées-Kit barra filettata-Kit barra roscada | 3 | ¨14 | 2250 |
| | Adjustable foot kit-Pfostenträger-Paalhouder-Pied de poteau-Portapilastri-Base para poste | 1 | | |
| | Backrest-Rückenlehne-Rugleuning-Dossier-Schienale-Respaldo | 1 | 235x1800 | |
| | Bracket 140x40-Lochplatte-Gatenplaat-Connecteur métallique-Piastre forate-Placas perforadas | 2 | 140x40 | |
| CI | Ceiling Insulation-Deckelsolation-Plafondisolatie-Isolation du plafond-Isolamento del soffitto-Aislamiento de techo | 2 | 1990x995 | |
| | Door kit-Tür satz-Deur set-Kit porte-Kit porta-Kit para puerta | 1 | | |
| | Lower Bench-Untere Bank-Onderbank-Banc inférieur-Banco inferiore-Banco inferior | 1 | 360x1998 | |
| | Nail 1.8x40-Nagel-Spijker-Clou-Chiodo-Clavo | 500 | 1.8x40 | |
| | Sauna bench-Saunabank-Banc de sauna-Panchina sauna-Banco de sauna | 1 | 500x1998 | |
| | Sauna ventilation kit-Außengitter-Schoepenrooster-Panneau de ventilation-Griglia di ventilazione-Rejilla de ventilacion | 1 | | |
| S4x60 | Screw 4x60-Schraube-Schroef-Vis-Vite-Tornillo | 5 | 4x60 | |
| S5x70 | Screw 5x70-Schraube-Schroef-Vis-Vite-Tornillo | 30 | 5x70 | |
| S6x120 | Screw 6x120-Schraube-Schroef-Vis-Vite-Tornillo | 25 | 6x120 | |
| | Upper bench-Obere Bank-Bovenbank-Banc supérieur-Banco superiore-Banco superior | 1 | 600x1998 | |

| Model | Tampere 40 L | Material | Page 2/3 |
|---|---|---|---|

| Pos | Specification-Spezifikation-Specificatie-Nomenclature-Elementi-Especification<br>Sauna Lizzy 40 M | Qty | Profile (mm) | Lenght (mm) |
|---|---|---|---|---|
| S6x120 | Screw 6x120-Schraube-Schroef-Vis-Vite-Tornillo | 25 | 6x120 | |
| | Sauna bench-Saunabank-Banc de sauna-Panchina sauna-Banco de sauna | 1 | 500x840 | |
| | WINDOW 700x1850<br>W08 H 700x1850-40 ISO TEMPERED<br> 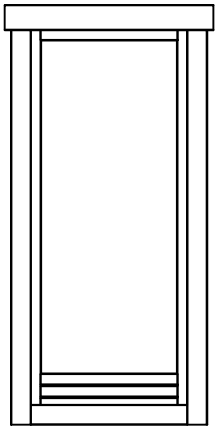 | 1 | | |
| | WINDOW 800x1850+WINDOW 800x1850<br>W08 H 800x1850-40 ISO TEMPERED<br> 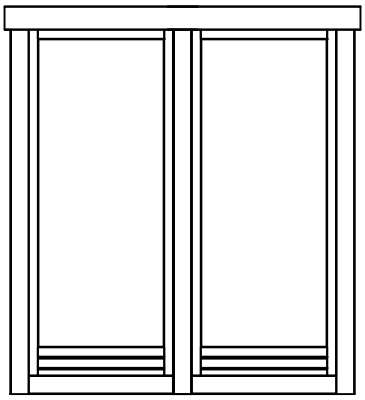 | 1+1 | | |
| | DOOR 800x1900<br>SD08 F 800x1900-40 ISO R TEMPERED<br> 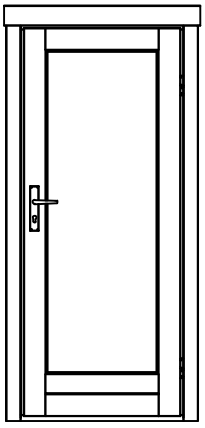 | 1 | | |
| | | | | |
| | | | | |
| | | | | |

| Model | Sauna Tampere 40 L | Material | Page 3/3 |
|---|---|---|---|

| Pos | Specification-Spezifikation-Specificatie-Nomenclature-Elementi-Especification<br>Sauna Lizzy40 M | Qty | Profile (mm) | Lenght (mm) |
|---|---|---|---|---|
| | DOOR 690x1900<br>SD Sauna 690x1900-40 L<br> 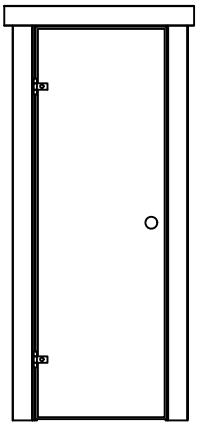 | 1 | | |
| L1 | Sauna door trim board | 1 | 28x95 | 900 |
| L2 | Sauna door trim board | 1 | 28x95<br>28x45 | 900 |
| L3 | Sauna door trim board | 2 | 28x95 | 1870 |
| L4 | Sauna door trim board | 2 | 28x95<br>28x45 | 1870 |
| S4x60 | Screw 4x60-Schraube-Schroef-Vis-Vite-Tornillo | 25 | 4x60 | |
| | Window trim board | 2 | 18x70 | 1540 |
| | Window trim board | 2 | 18x70 | 1775 |
| | Window trim board | 4 | 18x70 | 1845 |
| | Window trim board | 2 | 18x95 | 1740 |
| S4x60 | Screw 4x50-Schraube-Schroef-Vis-Vite-Tornillo | 40 | 4x60 | |
| | Lattice-Rankgitter-Trellis-Treillis-Pannello Traliccio-Panel Enrejado | 1 | 655x1930 | |
| P1 | Board | 2 | 18x95 | 655 |
| P2 | Board | 2 | 18x95 | 1894 |
| P3 | Board | 24 | 18x70 | 631 |
| S4x60 | Screw 4x50-Schraube-Schroef-Vis-Vite-Tornillo | 25 | 4x60 | |
| S5x90 | Screw 5x70-Schraube-Schroef-Vis-Vite-Tornillo | 2 | 5x90 | |
| | Support kit-Unterstützung satz-Steun set-Kit de support-Kit di supporto-Kit de soporte | 2 | 10x120 | |

| Model | Sauna Tampere 40 L | Material | Page 3/3 |
|---|---|---|---|

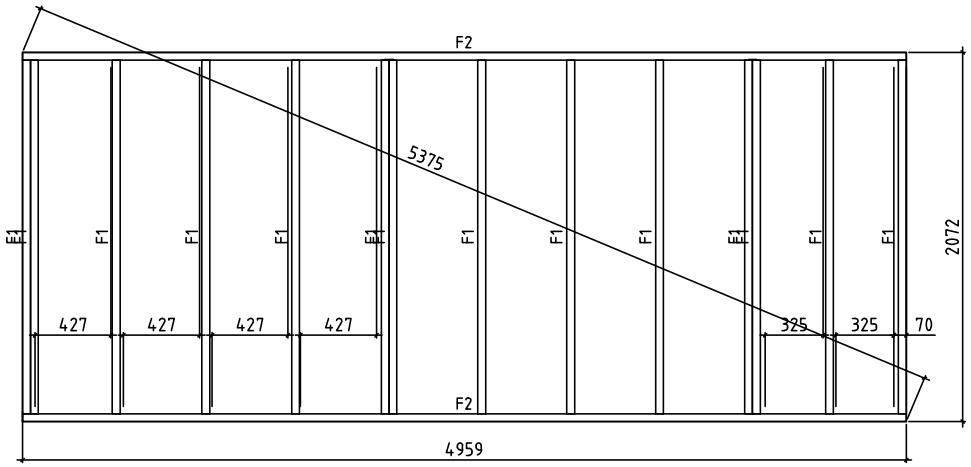


0 0.5m 1.0m 2.0m

| | |
|---|---|
| Model Foundation | Page |
| Drawing | Scale 1:30 |
| Material | Date 02.12.2024 |
| File Sauna Tampere 40 L.dwg | Drawn by |

H = 1.600 m
TOTAL: 8.00 m2

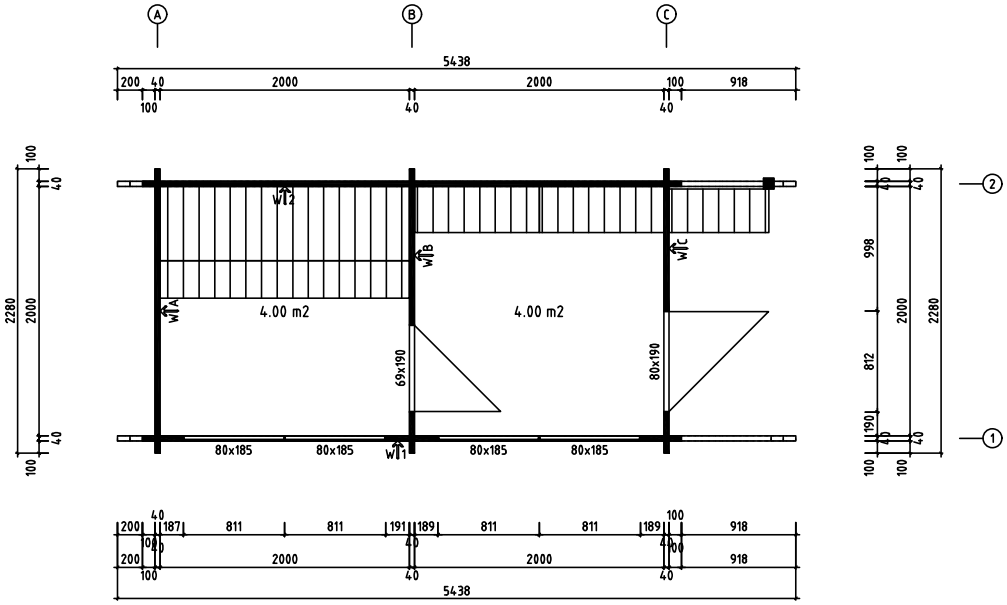


0 0.5m 1.0m 2.0m

| | | | |
|---|---|---|---|
| Model | Sauna Tampere 40 L | Page | |
| Drawing | PLAN | Scale | 1:20 |
| Material | | Date | 40x114 |
| File | 02.12.2024 | Drawn by | Sauna Tamp |

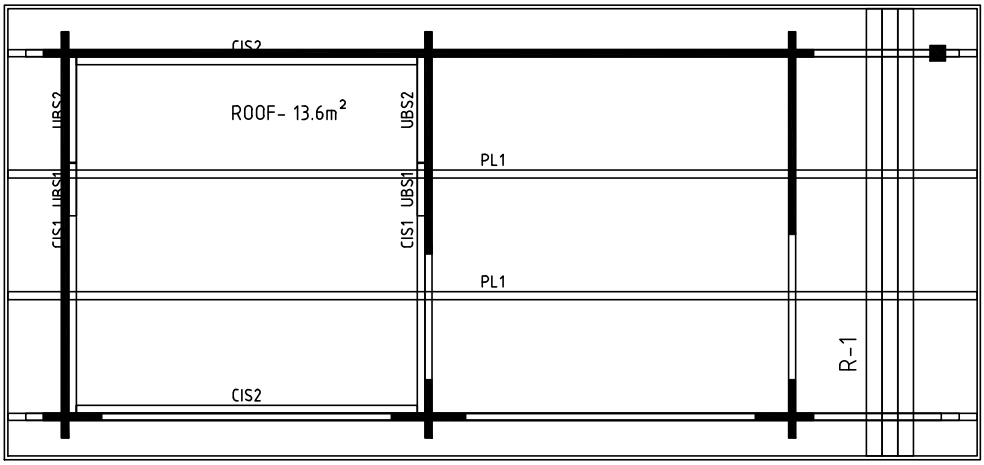


0 0.5m 1.0m 2.0m

| | |
|---|---|
| Model Tampere 40 L | Page |
| Drawing | Scale 1:30 |
| Material | Date 02.12.2024 |
| File Sauna Tampere 40 L.dwg | Drawn by |

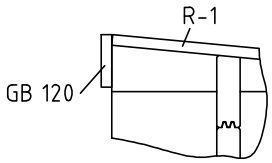


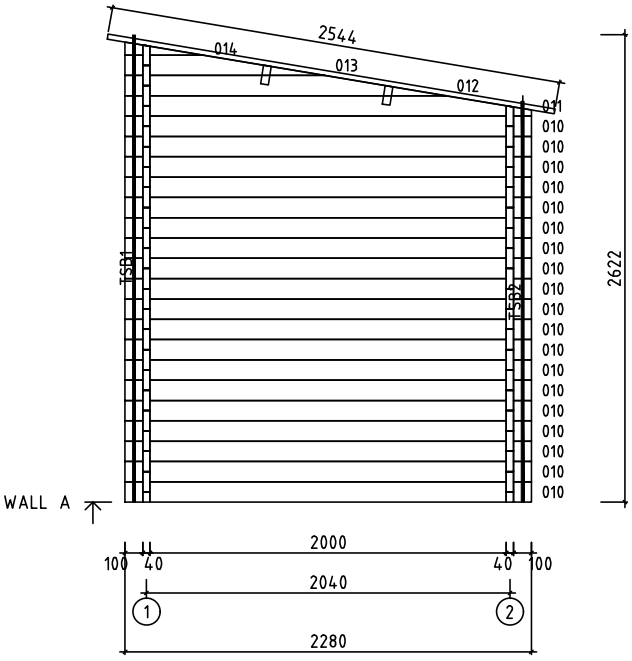


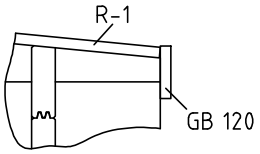


0 0.5m 1.0m 2.0m

| | | | |
|---|---|---|---|
| Model | Tampere 40 L | Page | 3 |
| Drawing | WALL A | Scale | 1:30 |
| Material | 4x11.4 | Date | 02.12.2024 |
| File | Sauna Tampere 40 L.dwg | Drawn by | |

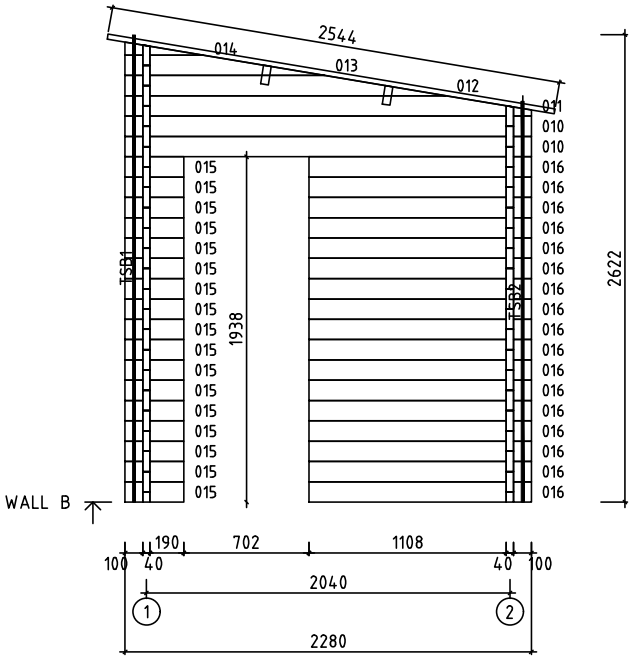


0 0.5m 1.0m 2.0m

| | | | |
|---|---|---|---|
| Model | Tampere 40 L | Page | 4 |
| Drawing | WALL B | Scale | 1:30 |
| Material | 4x11.4 | Date | 02.12.2024 |
| File | Sauna Tampere 40 L.dwg | Drawn by | |

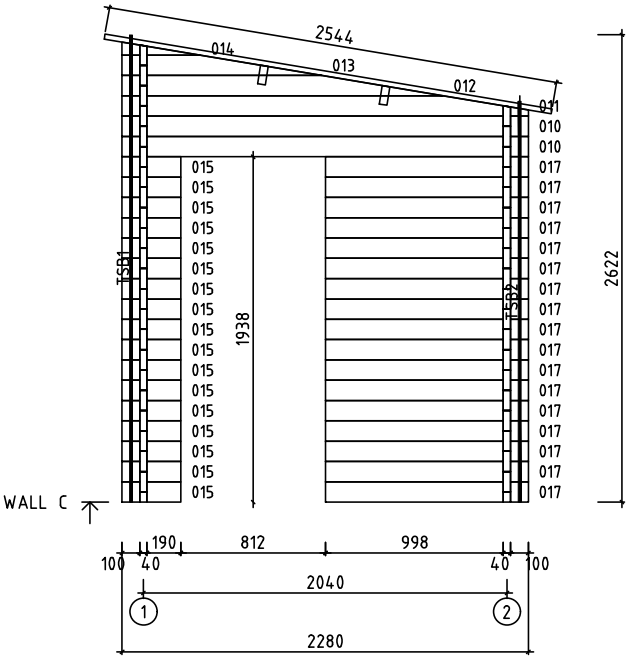


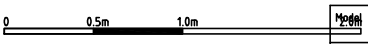


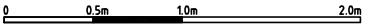


| | | | |
|---|---|---|---|
| Model | Tampere 40 L | Page | 5 |
| Drawing | WALL C | Scale | 1:30 |
| Material | 4x11.4 | Date | 02.12.2024 |
| File | Sauna Tampere 40 L.dwg | Drawn by | |

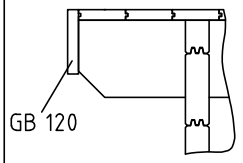


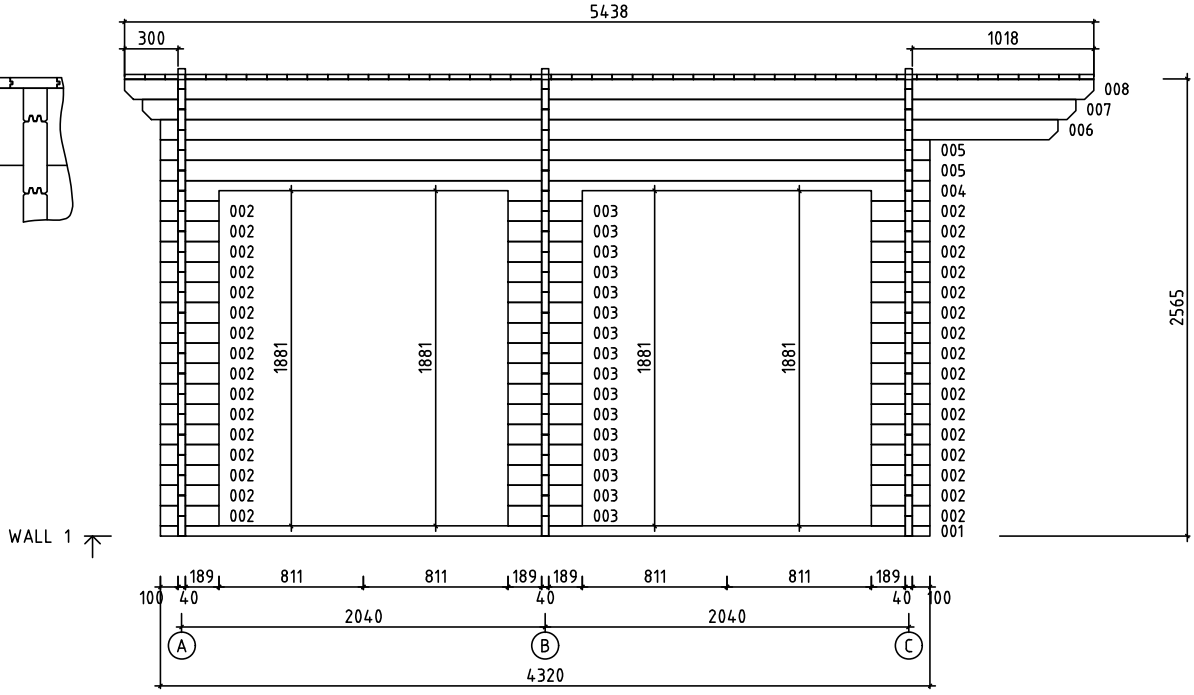


0 0.5m 1.0m 2.0m

| | | | |
|---|---|---|---|
| Model | Tampere 40 L | Page | 6 |
| Drawing | WALL 1 | Scale | 1:30 |
| Material | 4x11.4 | Date | 02.12.2024 |
| File | Sauna Tampere 40 L.dwg | Drawn by | |

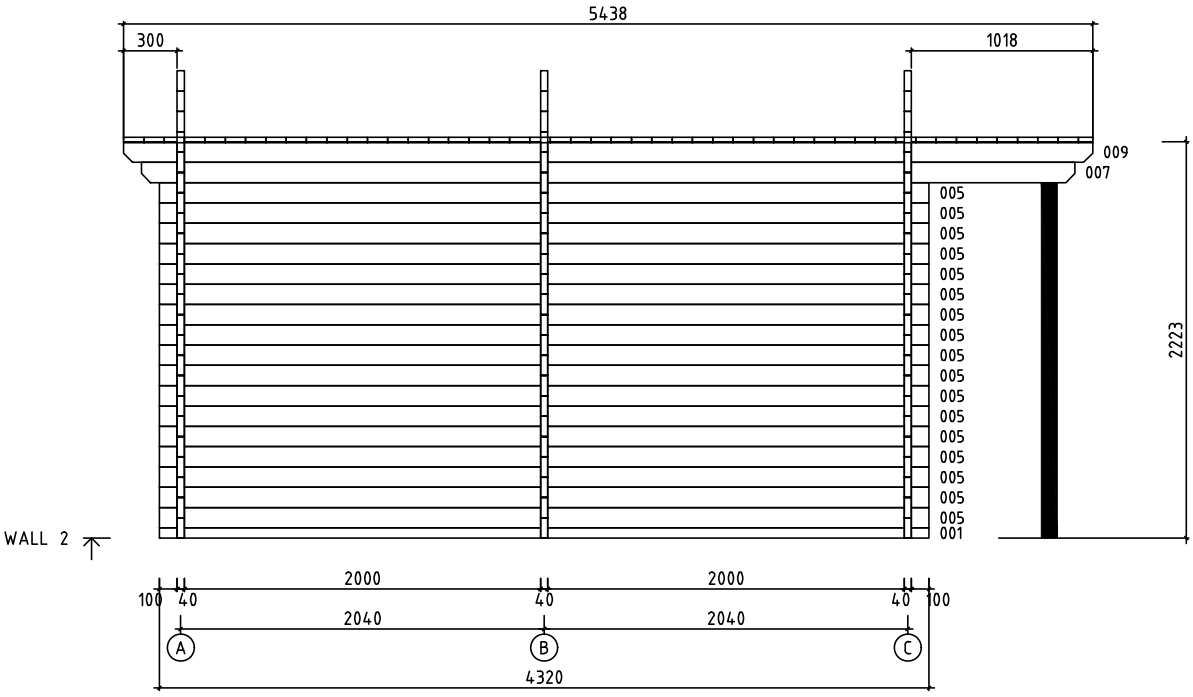


0 0.5m 1.0m 2.0m

| | | | |
|---|---|---|---|
| Model | Tampere 40 L | Page | 7 |
| Drawing | WALL 2 | Scale | 1:30 |
| Material | 4x11.4 | Date | 02.12.2024 |
| File | Sauna Tampere 40 L.dwg | Drawn by | |