Sauna Tampere 40 S

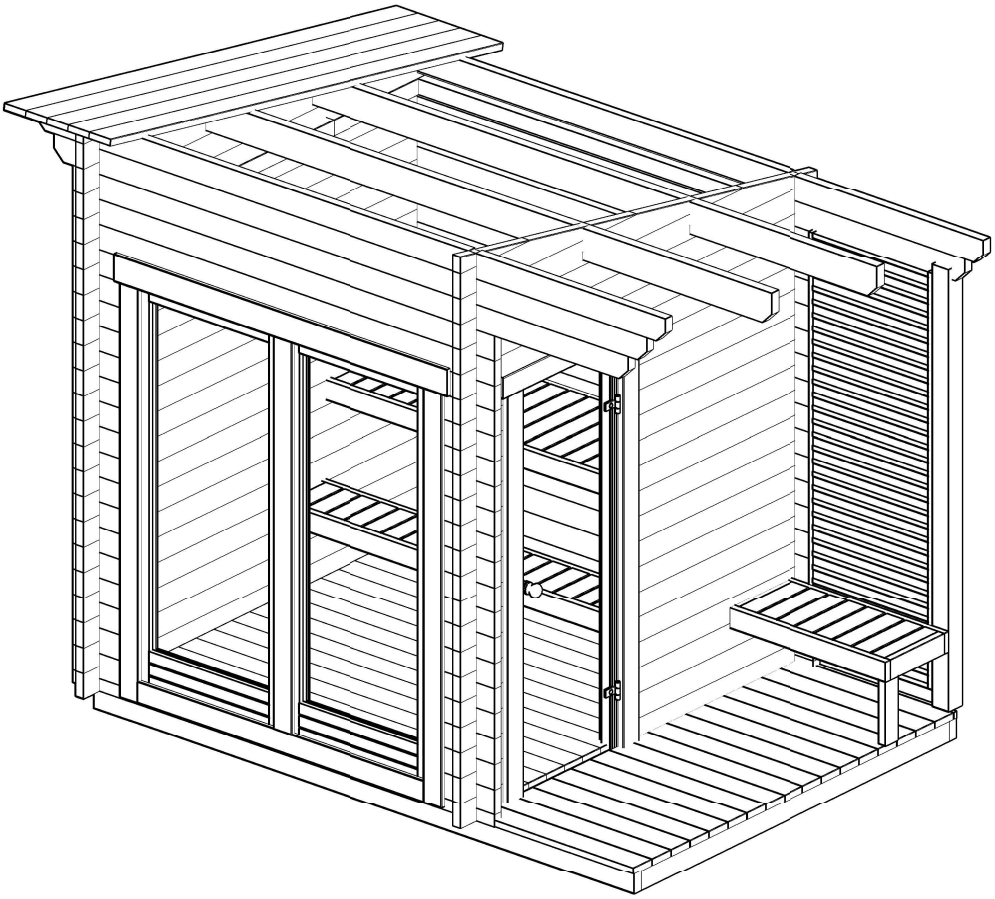

Pos	Specification-Spezifikation-Specificatie-Nomenclature-Elementi-Especification Sauna Tampere 40 S	Qty	Profile (mm)	Lenght (mm)
001	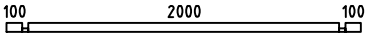	2	40x57	2280
002		32	40x114	330
003	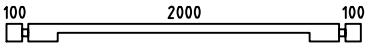	1	40x114	2280
004	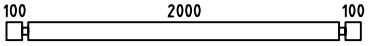	19	40x114	2280
005	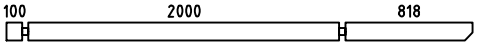	1	40x114	2998
006	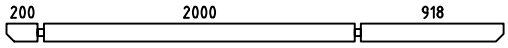	2	40x114	3198
007	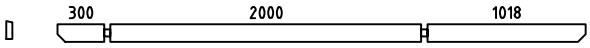	1	40x114	3398
008	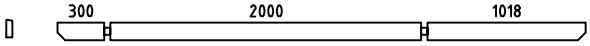	1	40x114	3398
009	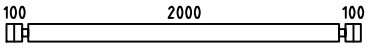	21	40x114	2280
014		17	40x114	330
015	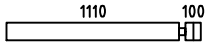	17	40x114	1250
WA-1	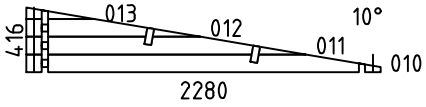	1		
WB-1	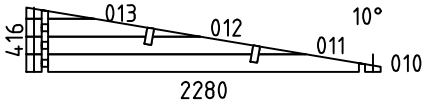	1		
F2	FOUNDATION-FUNDAMENT-FONDATION-FONDAZIONE-VIGAS DE CIMENTACIÓN 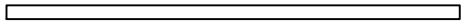	2	44x90	2915
F1	FOUNDATION-FUNDAMENT-FONDATION-FONDAZIONE-VIGAS DE CIMENTACIÓN 	9	44x90	1977
UBS1	UPPER BENCH SUPPORT-TRAGELEISTE-STEUNEN BAR-SUPPORT-SUPPORTO-SOPORTE 	2	44x70	593
LBS1	LOWER BENCH SUPPORT-TRAGELEISTE-STEUNEN BAR-SUPPORT-SUPPORTO-SOPORTE 	2	44x70	295
CIS1	CEILING INSULATION SUPPORT-TRAGELEISTE-STEUNEN BAR-SUPPORT-SUPPORTO-SOPORTE 	2	44x70	1998
CIS2	CEILING INSULATION SUPPORT-TRAGELEISTE-STEUNEN BAR-SUPPORT-SUPPORTO-SOPORTE 	2	44x70	1910
PL1	PURLIN-DAKBALK-DACHPFETTE-PANNE-ARCARECCIO-CORREA 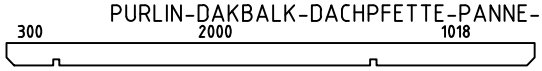	2	44x144	3398
F-1	Floor board-Fussbodenbrett-Vloerplank-Lame de plancher-Tavola pavimento-Tabla de suelo 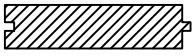	18	114x28	1992

Model	Sauna Tampere 40 S	Material	Page 1/4

Pos	Specification-Spezifikation-Specificatie-Nomenclature-Elementi-Especification Sauna Tampere 40 S	Qty	Profile (mm)	Lenght (mm)
R-1	Roof board-Dachbrett-Dakplank-Volige-Tavola tetto-Tabla de tejado	30+1	114x28	2546
T-1	Terrace board-Terrassendiele-Vlonderplank-Lame de terrasse-Tavola terrazzo-Tabla de terraza	18+1	114x28	840
	-POST 8.5x8.5	1	85x85	1995
FLB-1	Floor beading 2000-Fussbodenleiste-Plinten-Moulure de finition-Listello pavimento-Liston de suelo	4	18x40	8rmt.
GB-1	Gable board 120-Giebelblende-Gevelplank-Planche de rive-Tavola di bordo-Tabla de borde	2	18x120	2586
GB-2	Gable board 120-Giebelblende-Gevelplank-Planche de rive-Tavola di bordo-Tabla de borde	2	18x120	3440
TSB1	Threaded steel bar kit-Gewindestange satz-Draadstang set-Kit de tiges filetées-Kit barra filettata-Kit barra roscada	2	¨14	2620
TSB2	Threaded steel bar kit-Gewindestange satz-Draadstang set-Kit de tiges filetées-Kit barra filettata-Kit barra roscada	2	¨14	2250
	Adjustable foot kit-Pfostenträger-Paalhouder-Pied de poteau-Portapilastri-Base para poste	1		
	Backrest-Rückenlehne-Rugleuning-Dossier-Schienale-Respaldo	1	235x1800	
	Bracket 140x40-Lochplatte-Gatenplaat-Connecteur métallique-Piastre forate-Placas perforadas	2	140x40	
CI	Ceiling Insulation-Deckelsolation-Plafondisolatie-Isolation du plafond-Isolamento del soffitto-Aislamiento de techo	2	1990x995	
	Lower Bench-Untere Bank-Onderbank-Banc inférieur-Banco inferiore-Banco inferior	1	360x1998	
	Nail 1.8x40-Nagel-Spijker-Clou-Chiodo-Clavo	370	1.8x40	
	Sauna bench-Saunabank-Banc de sauna-Panchina sauna-Banco de sauna	1	500x840	
	Sauna ventilation kit-Außengitter-Schoepenrooster-Panneau de ventilation-Griglia di ventilazione-Rejilla de ventilacion	1		
S4x50	Screw 4x50-Schraube-Schroef-Vis-Vite-Tornillo	35	4x50	
S5x70	Screw 5x70-Schraube-Schroef-Vis-Vite-Tornillo	30	5x70	
S6x120	Screw 6x120-Schraube-Schroef-Vis-Vite-Tornillo	20	6x120	
	Upper bench-Obere Bank-Bovenbank-Banc supérieur-Banco superiore-Banco superior	1	600x1998	

Model	Sauna Tampere 40 S	Material	Page 2/4

Pos	Specification-Spezifikation-Specificatie-Nomenclature-Elementi-Especification Sauna Tampere 40 S	Qty	Profile (mm)	Lenght (mm)
	WINDOW 800x1850+WINDOW 800x1850 W08 H 800x1850-40 ISO TEMPERED 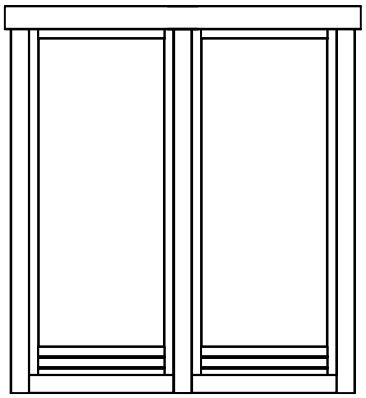	1+1		
	DOOR 690x1900 SD Sauna 690x1900-40 R 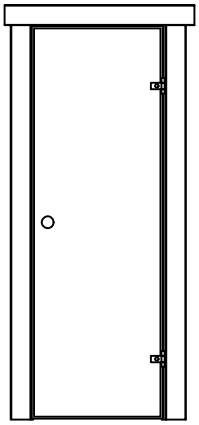	1		
	Window trim board	2	18x70	1540
	Window trim board	2	18x70	1775
	Window trim board	4	18x70	1845
	Window trim board	2	18x95	1740
	Lattice-Rankgitter-Trellis-Treillis-Pannello Traliccio-Panel Enrejado	1	655x1930	
P1	Board	2	18x95	655
P2	Board	2	18x95	1894
P3	Board	24	18x70	631
S4x60	Screw 4x50-Schraube-Schroef-Vis-Vite-Tornillo	25	4x60	
S5x90	Screw 5x70-Schraube-Schroef-Vis-Vite-Tornillo	2	5x90	
	Support kit-Unterstützung satz-Steun set-Kit de support-Kit di supporto-Kit de soporte	2	10x120	

Model	Sauna Tampere 40 S	Material	Page 3/4

Pos	Specification-Spezifikation-Specificatie-Nomenclature-Elementi-Especification Sauna Tampere 40 S	Qty	Profile (mm)	Lenght (mm)
L1	Sauna door trim board 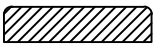	1	28x95	900
L2	Sauna door trim board 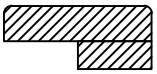	1	28x95 28x45	900
L3	Sauna door trim board 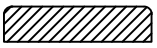	2	28x95	1870
L4	Sauna door trim board 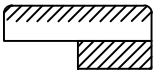	2	28x95 28x45	1870

Model	Sauna Tampere 40 S	Material	Page 4/4

H = 1.600 m
TOTAL: 4.00 m2

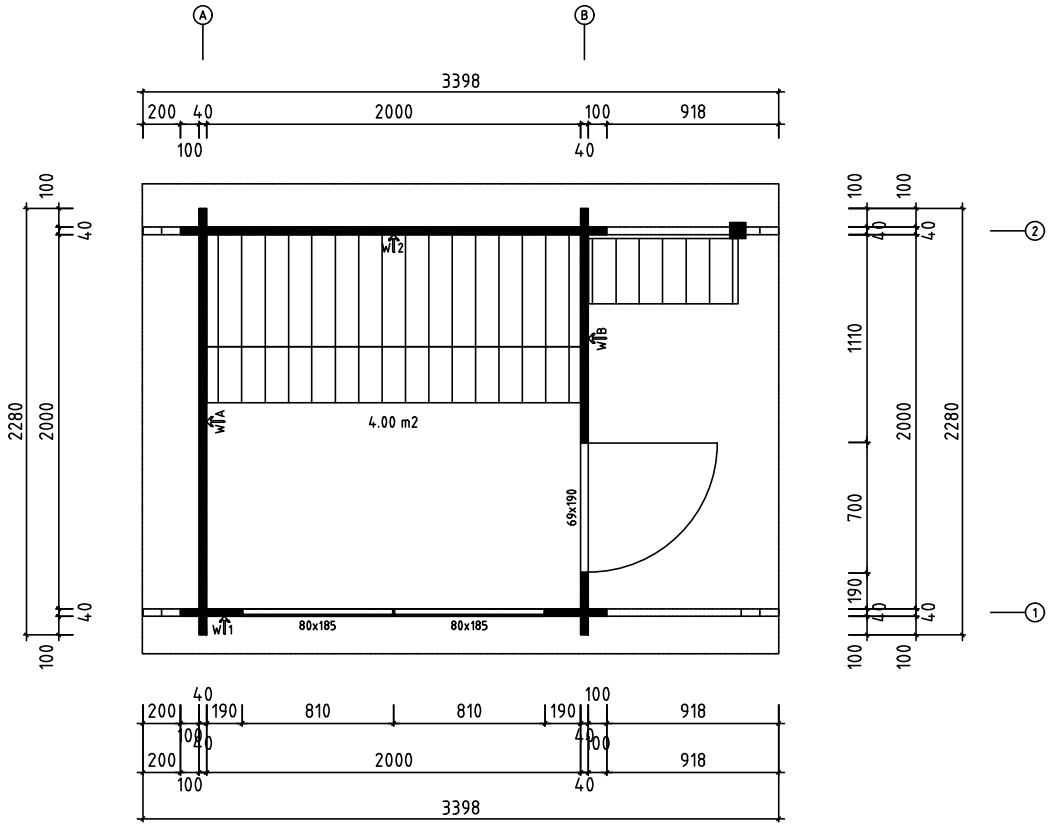

0 0.5m 1.0m 2.0m

Model	Sauna Tampere 40 S	Page	
Drawing	PLAN	Scale	1:20
Material	40x114	Date	13.02.2025
File	Sauna Tampere 40 S.dwg	Drawn by	

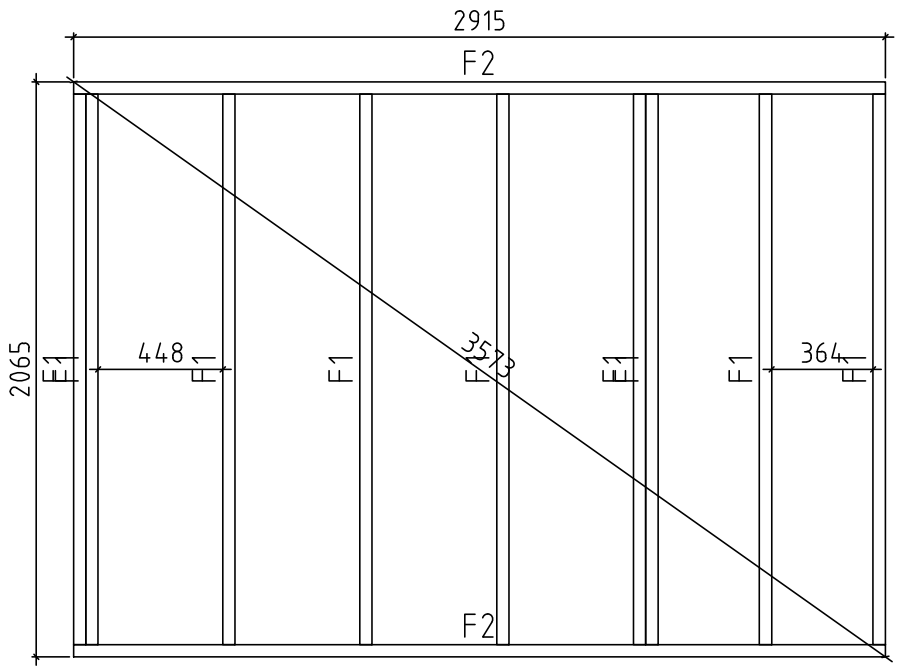

0 0.5m 1.0m 2.0m

Model	Sauna Tampere 40 S	Page	
Drawing	FOUNDATION	Scale	1:20
Material	40x114	Date	13.02.2025
File	Sauna Tampere 40 S.dwg	Drawn by	

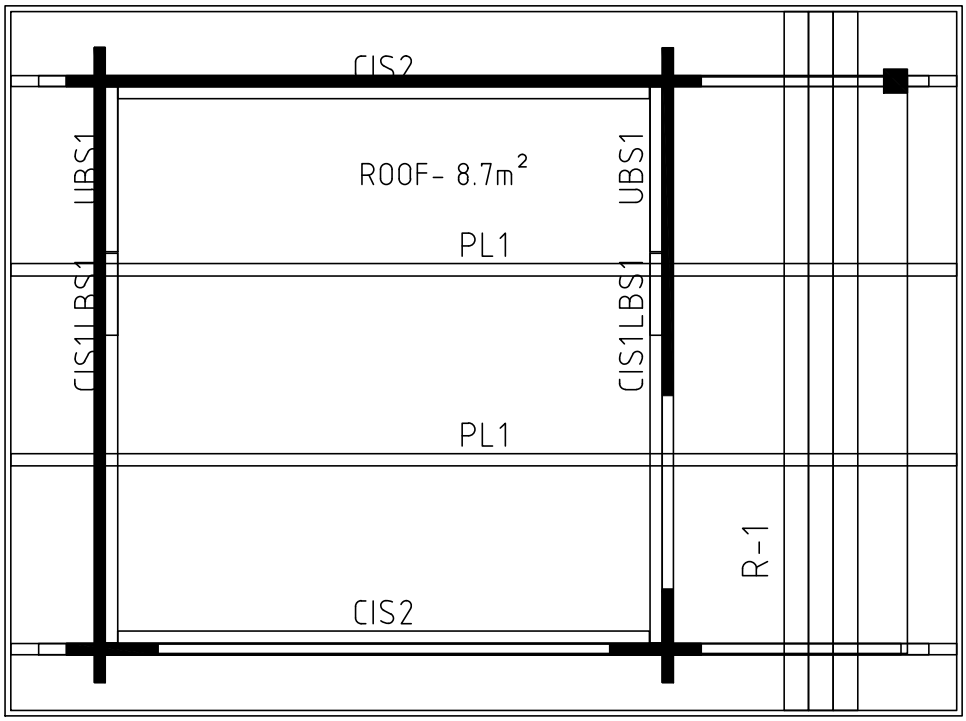

0 0.5m 1.0m 2.0m

Model	Sauna Tampere 40 S	Page	
Drawing	CEILING&ROOF	Scale	1:20
Material	40x114	Date	13.02.2025
File	Sauna Tampere 40 S.dwg	Drawn by	

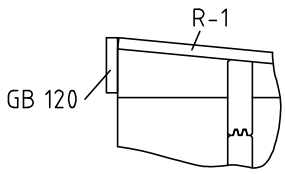

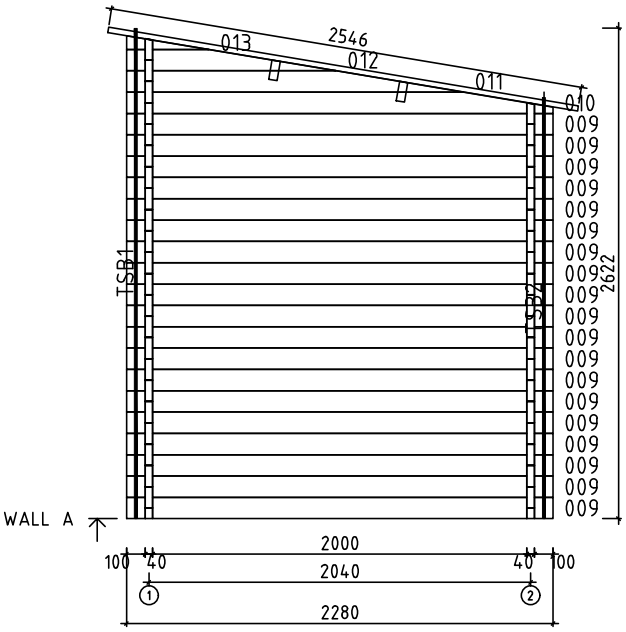

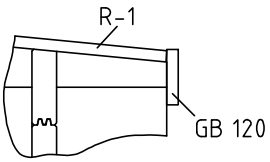

0 0.5m 1.0m 2.0m

Model	Sauna Tampere 40 S	Page	3
Drawing	WALL A	Scale	1:20
Material	4x11.4	Date	13.02.2025
File	Sauna Tampere 40 S.dwg	Drawn by	

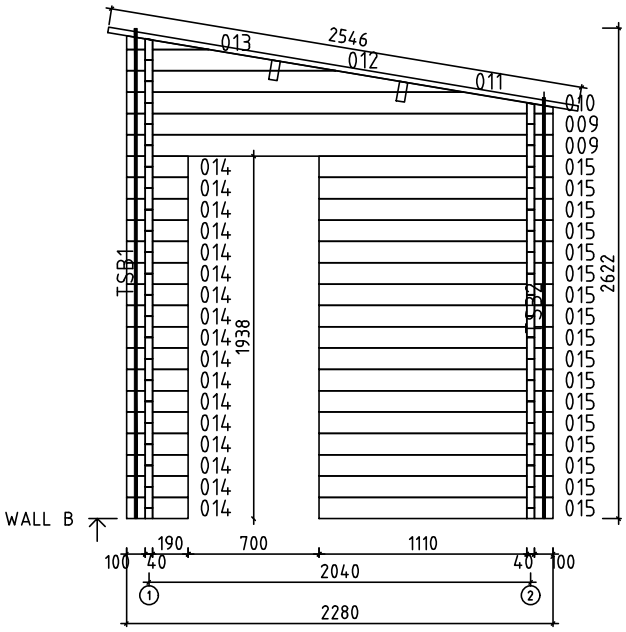

0 0.5m 1.0m 2.0m

Model	Sauna Tampere 40 S	Page	4
Drawing	WALL B	Scale	1:20
Material	4x11.4	Date	13.02.2025
File	Sauna Tampere 40 S.dwg	Drawn by	

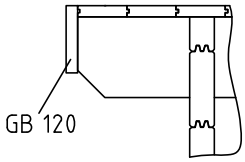

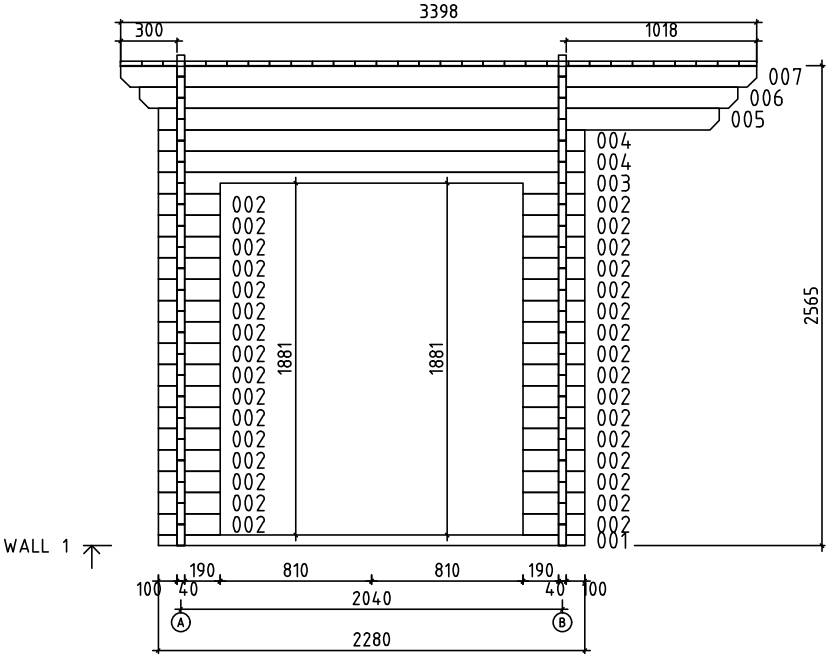

0 0.5m 1.0m 2.0m

Model	Sauna Tampere 40 S	Page	5
Drawing	WALL 1	Scale	1:20
Material	4x11.4	Date	13.02.2025
File	Sauna Tampere 40 S.dwg	Drawn by	

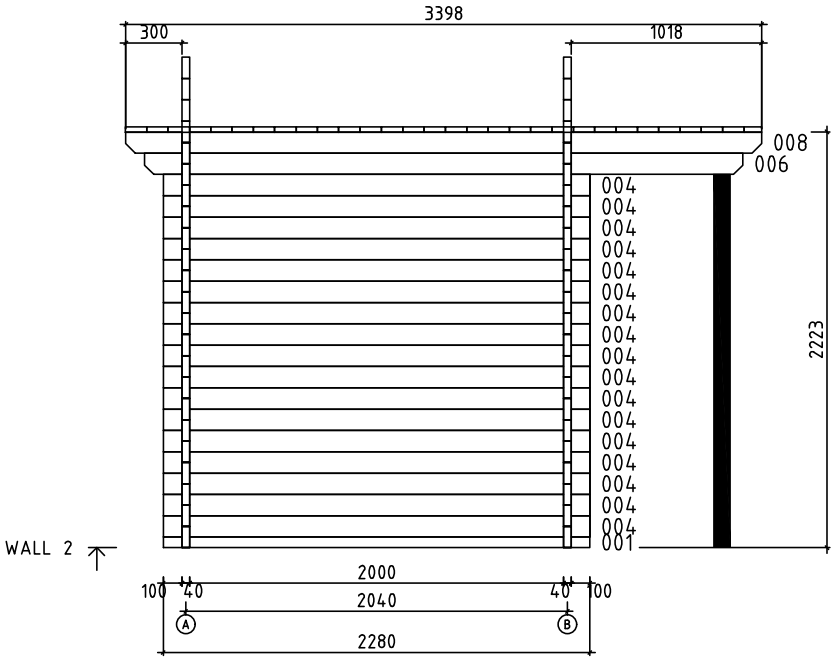

0 0.5m 1.0m 2.0m

Model	Sauna Tampere 40 S	Page	6
Drawing	WALL 2	Scale	1:20
Material	4x11.4	Date	13.02.2025
File	Sauna Tampere 40 S.dwg	Drawn by	

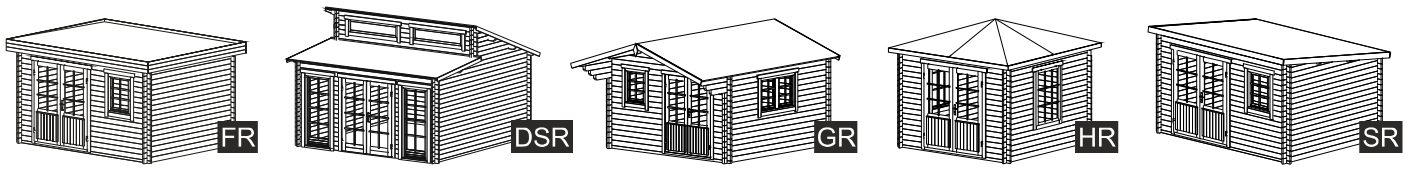

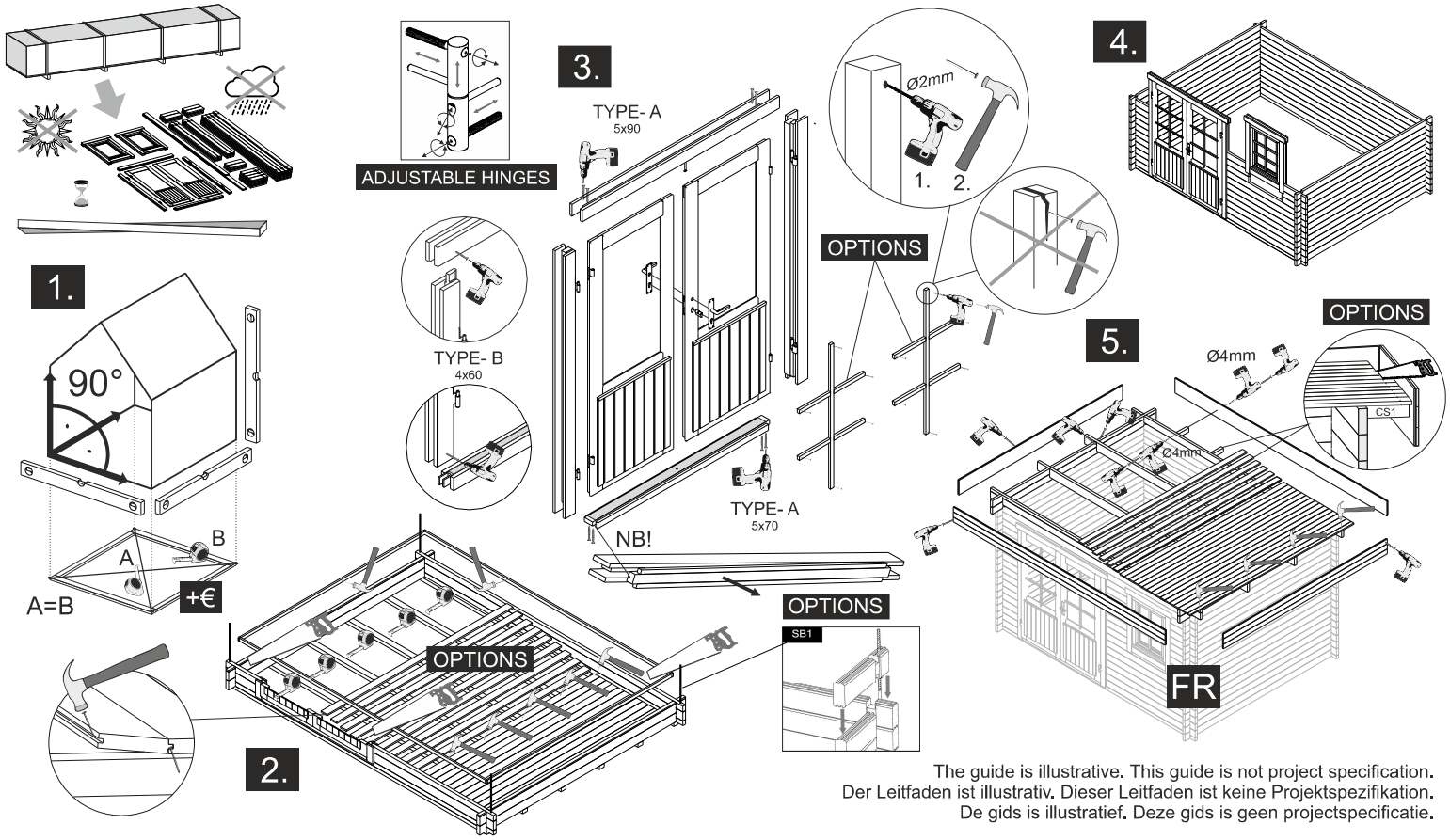

The guide is illustrative. This guide is not project specification.
Der Leitfaden ist illustrativ. Dieser Leitfaden ist keine Projektspezifikation.
De gids is illustratief. Deze gids is geen projectspecificatie.

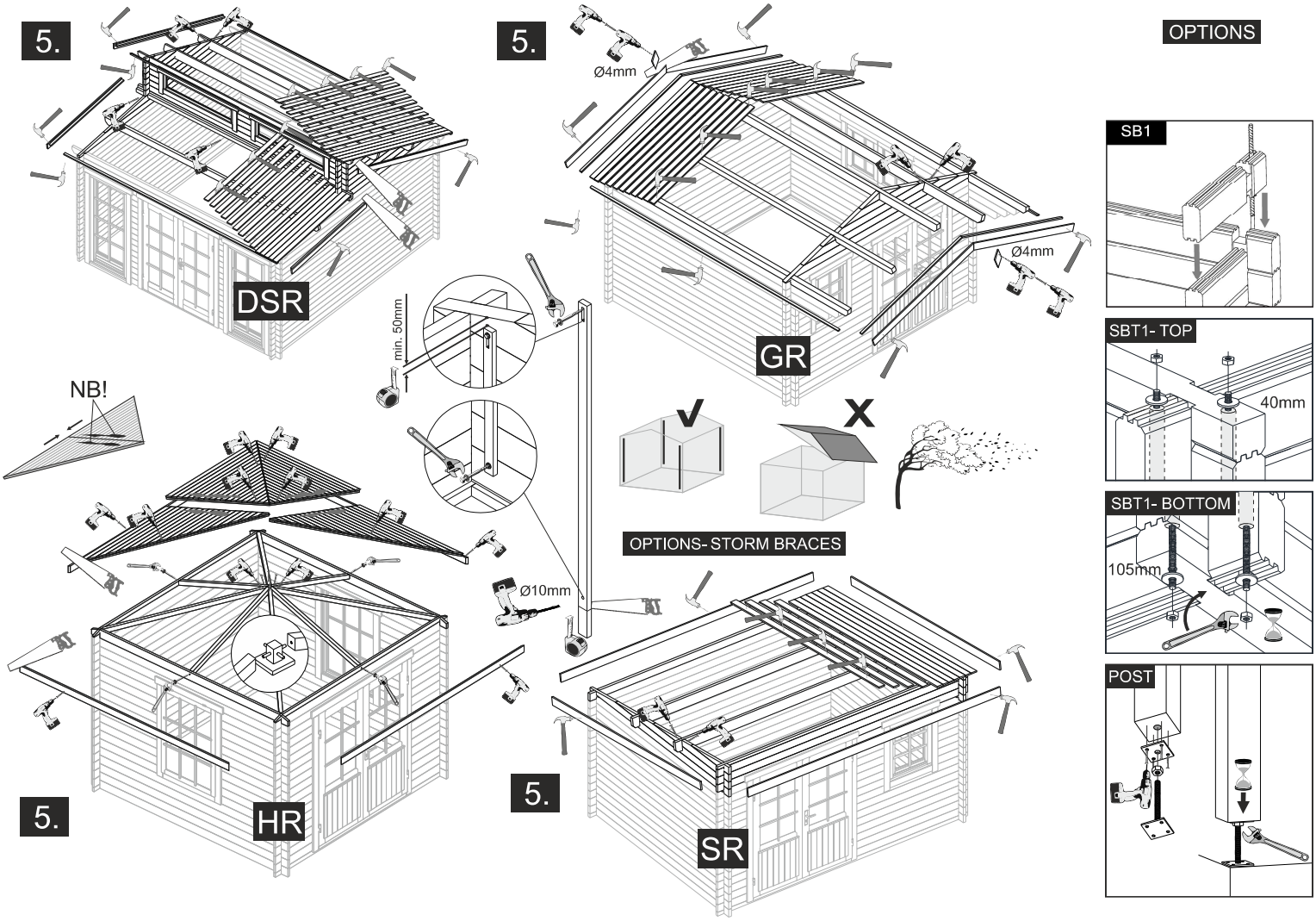
5.
DSR
5.
Ø4mm
Ø4mm
GR
OPTIONS
SB1
SBT1- TOP
40mm
SBT1- BOTTOM
105mm
POST
min. 50mm
NB!
OPTIONS- STORM BRACES
Ø10mm
5.
HR
5.
SR

Öffnung/Opening

A

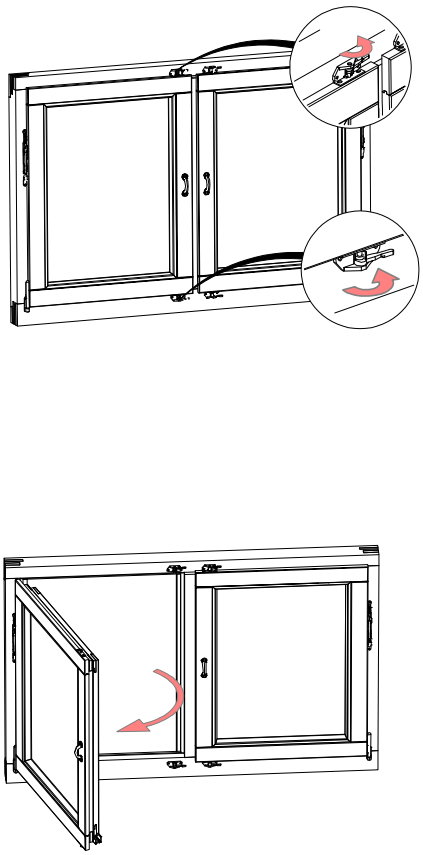

B

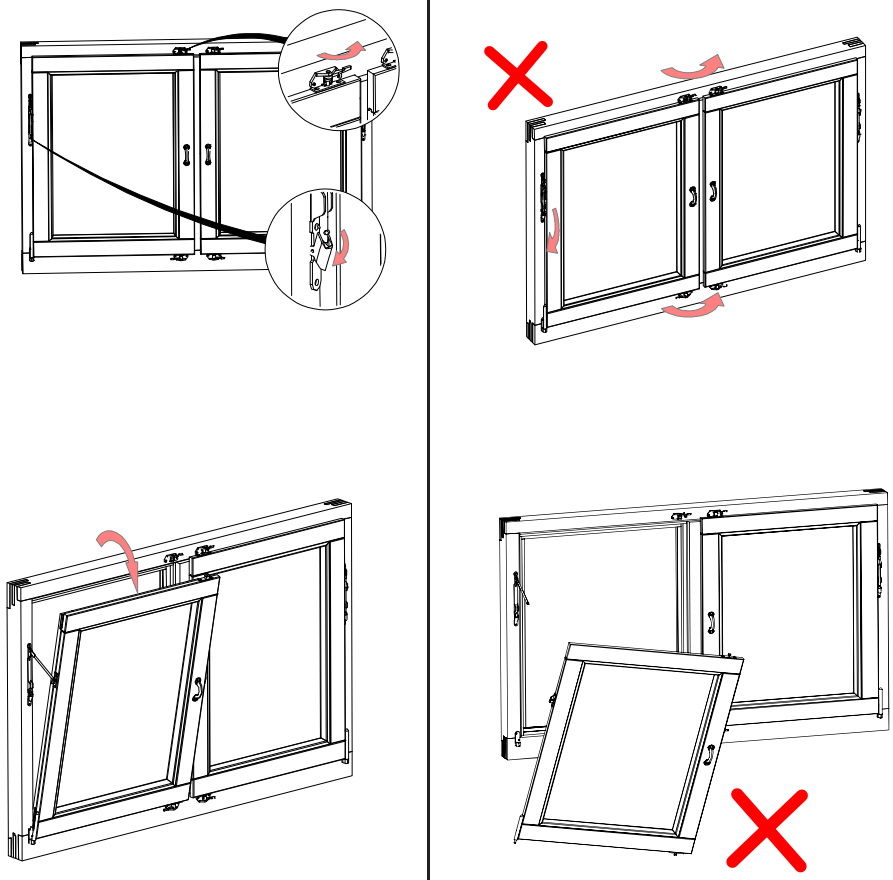

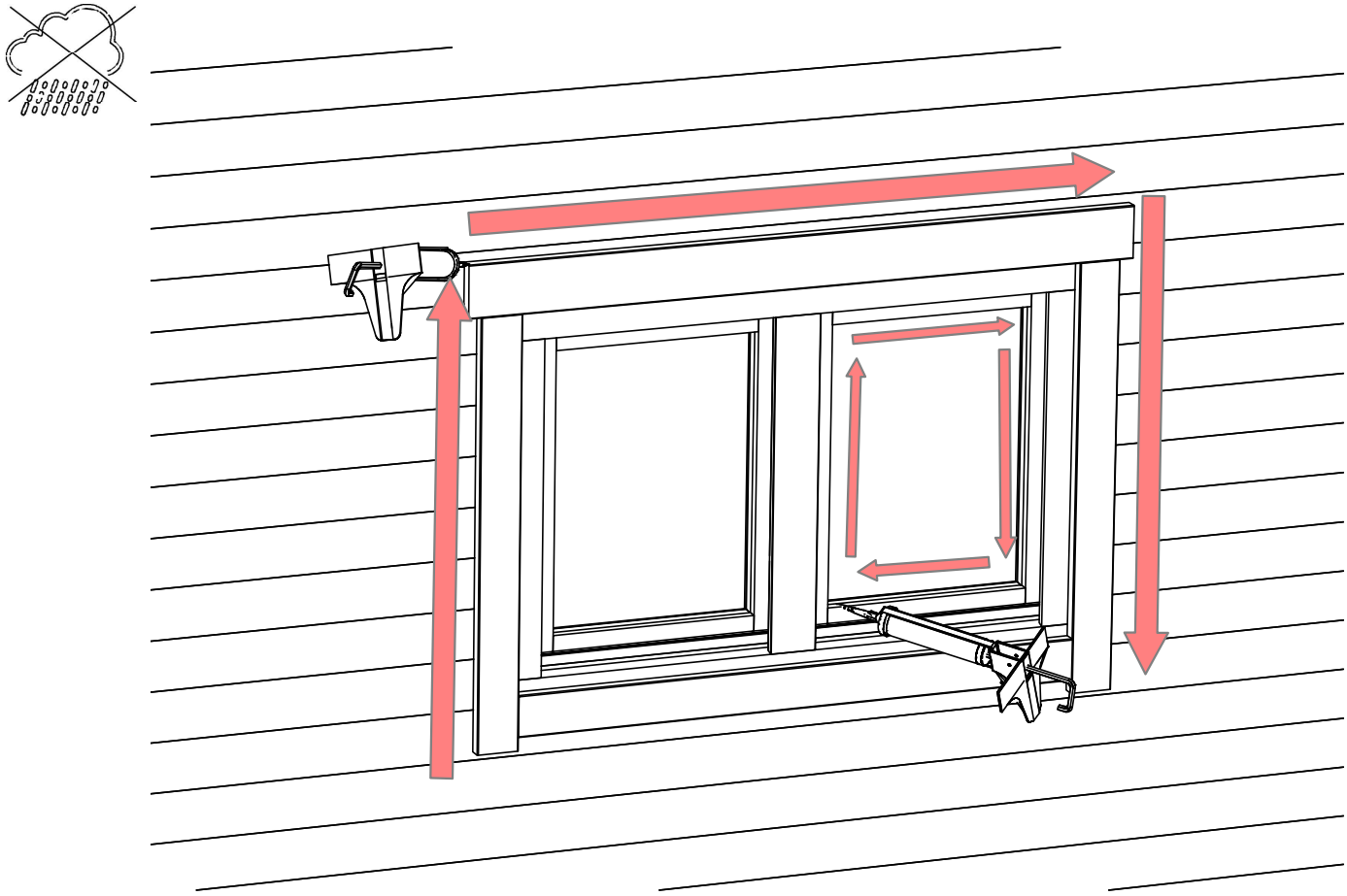

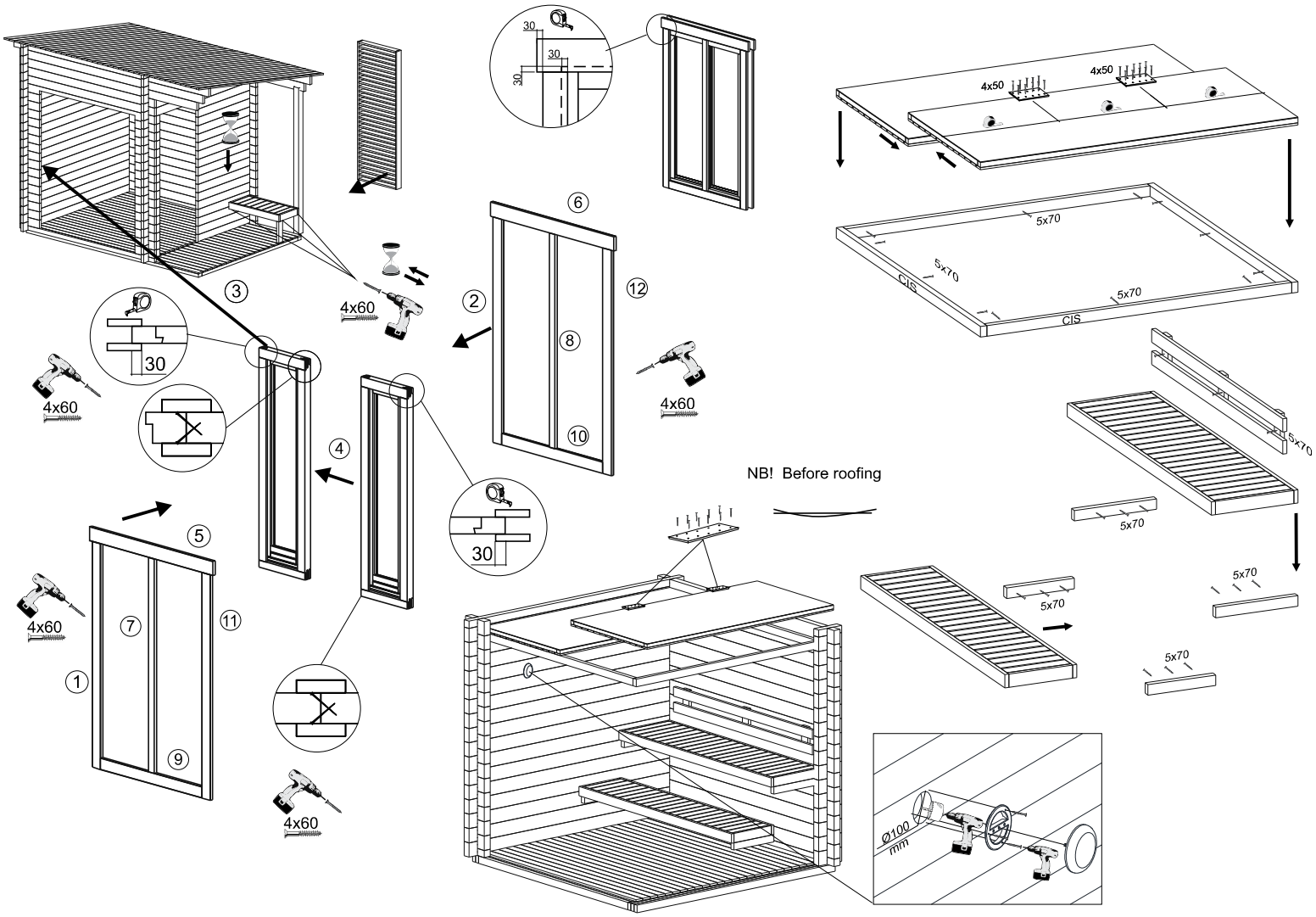
30
30
30
4x50
4x50
5x70
5x70
CIS
5x70
CIS
5x70
5x70
5x70
5x70
5x70
6
12
8
10
2
3
4x60
4x60
4x60
30
30
4
5
11
7
1
9
4x60
4x60
NB! Before roofing
Ø100 mm

1.

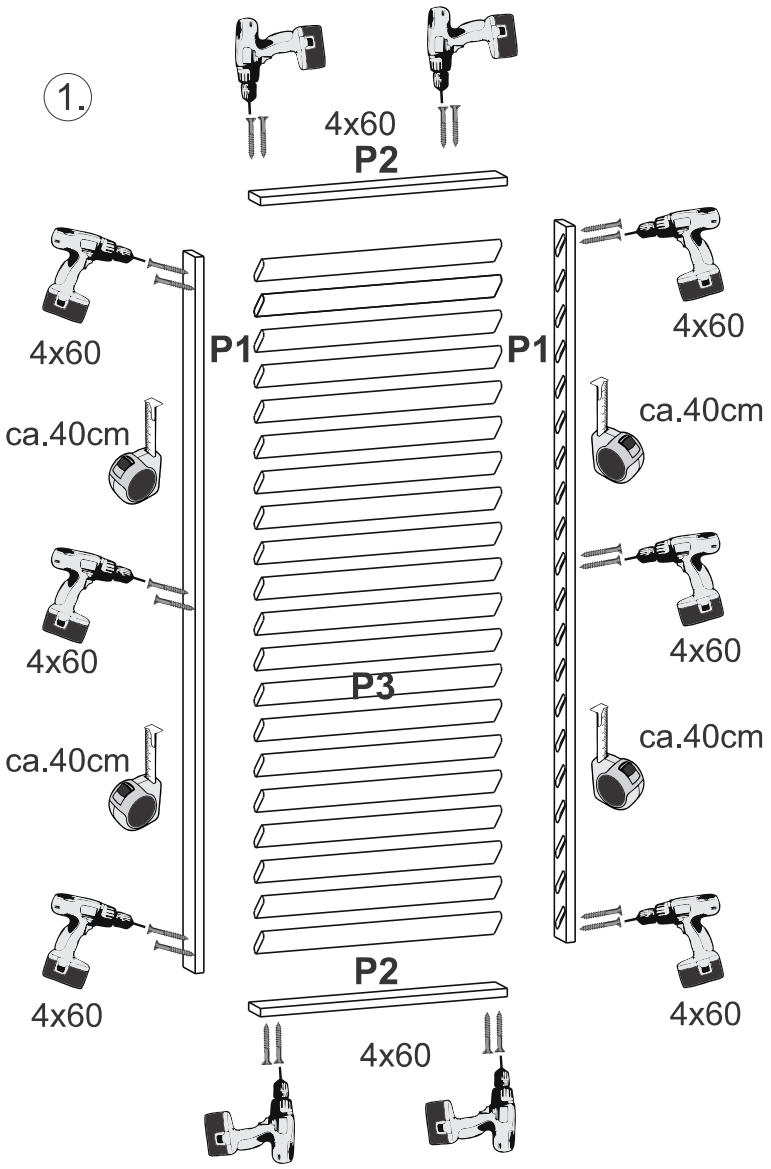
4x60
P2
4x60
P1
P1
4x60
ca.40cm
ca.40cm
4x60
4x60
P3
ca.40cm
ca.40cm
4x60
P2
4x60
4x60

2.

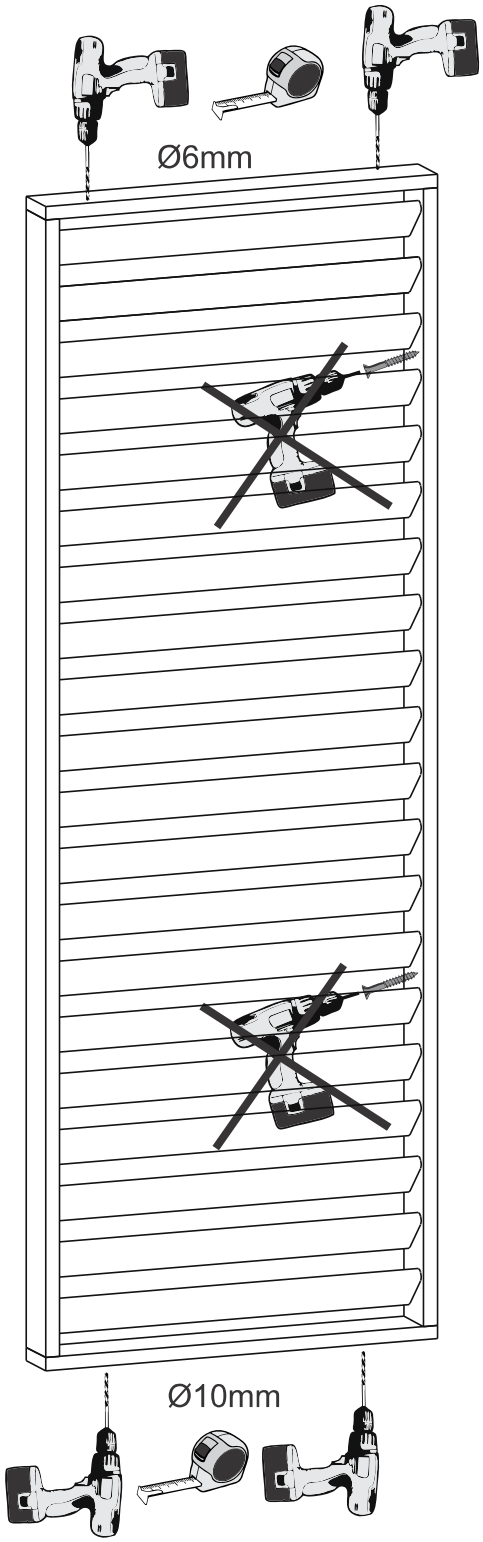
Ø6mm
Ø10mm

3.

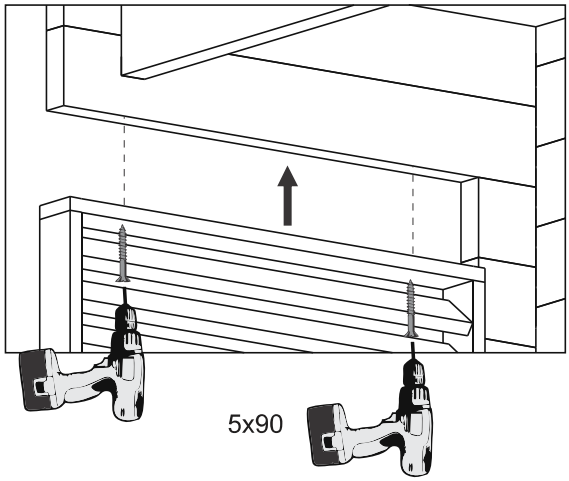
5x90

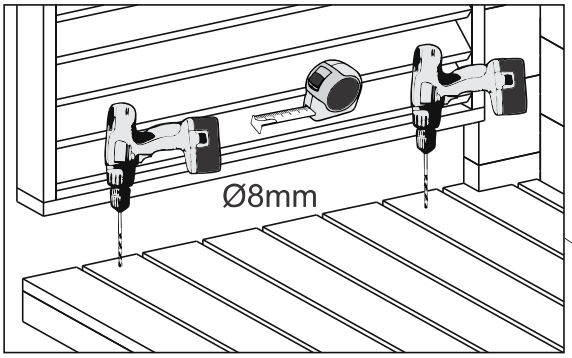
Ø8mm
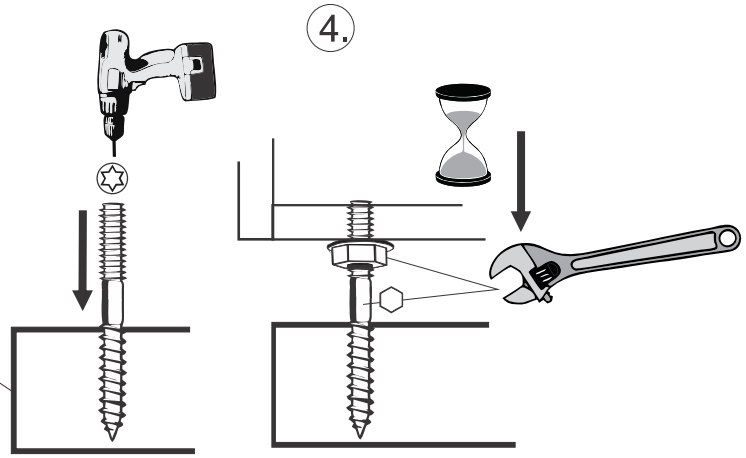
4.